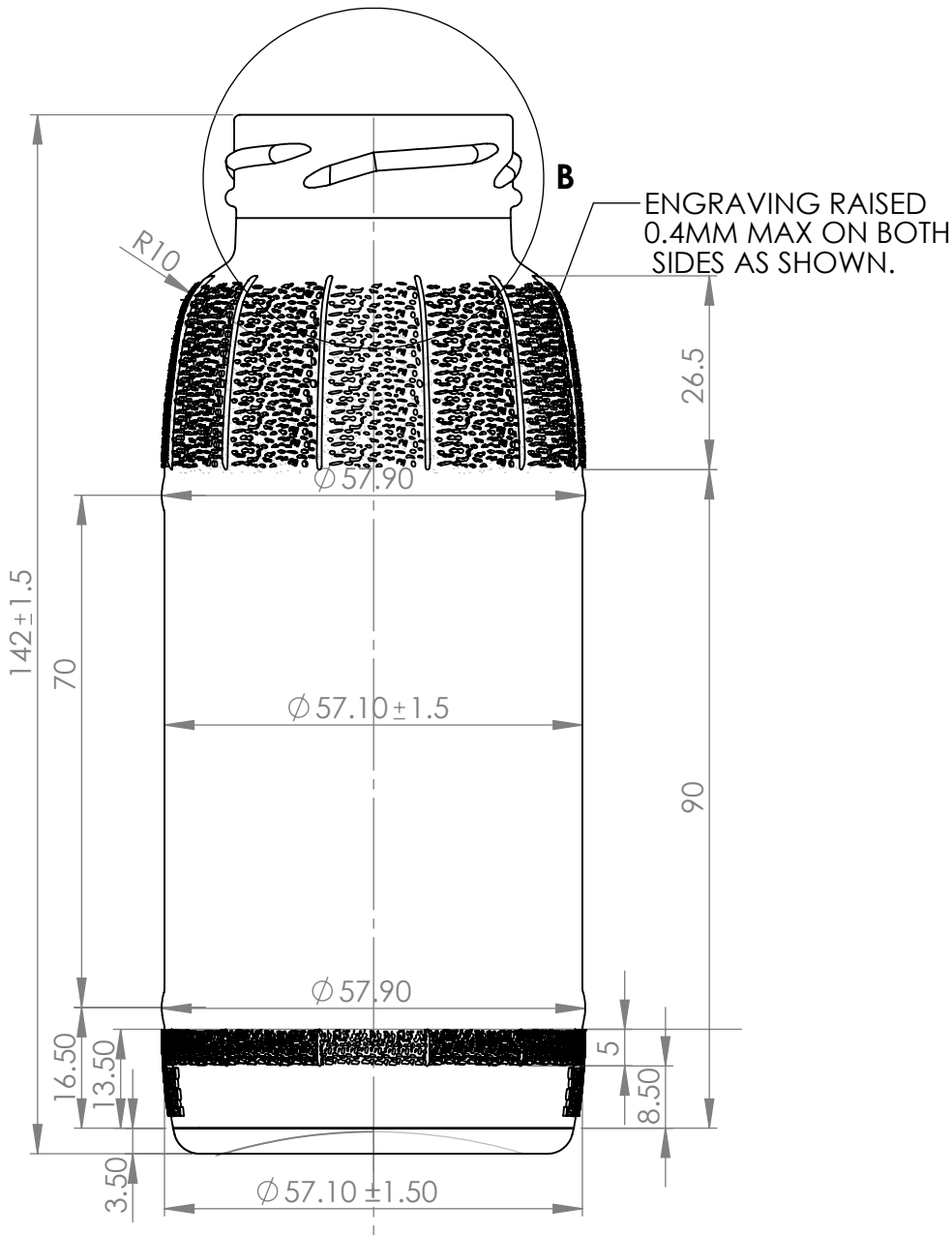

FRONT VIEW

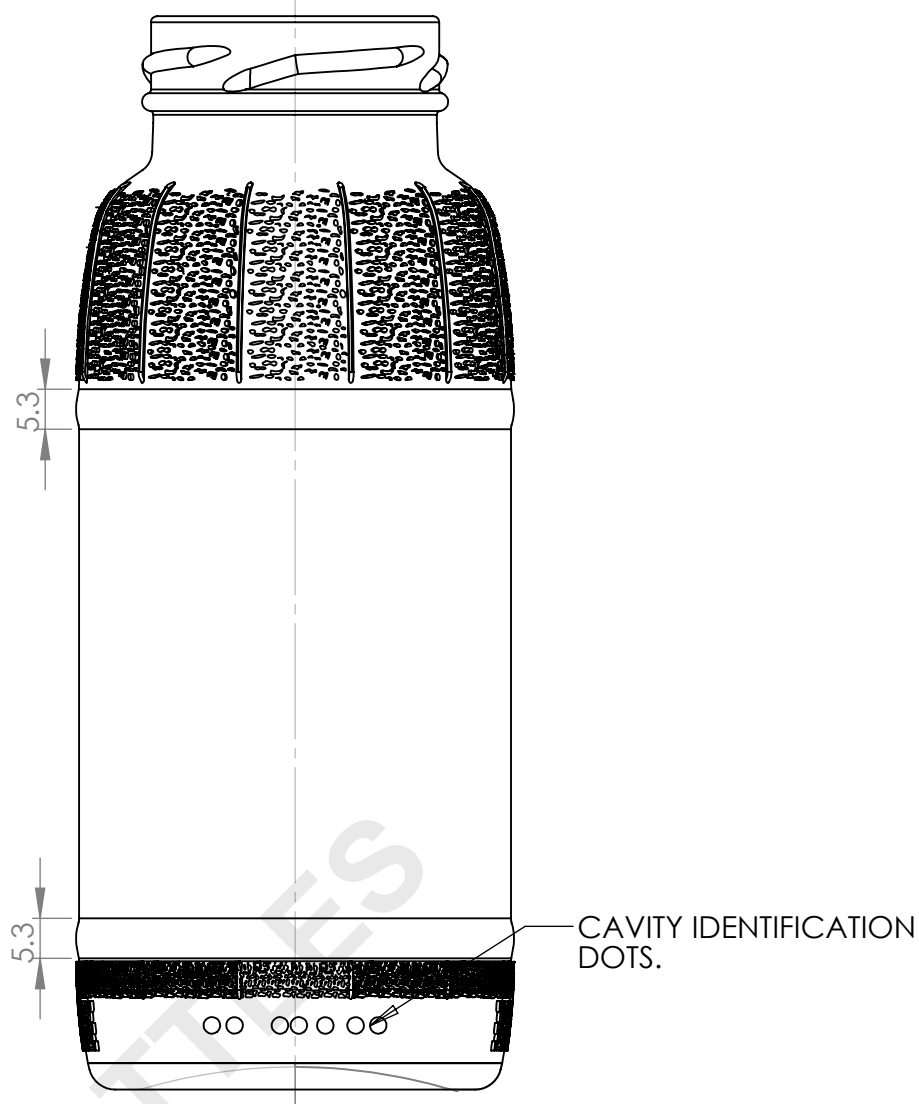

BACK VIEW

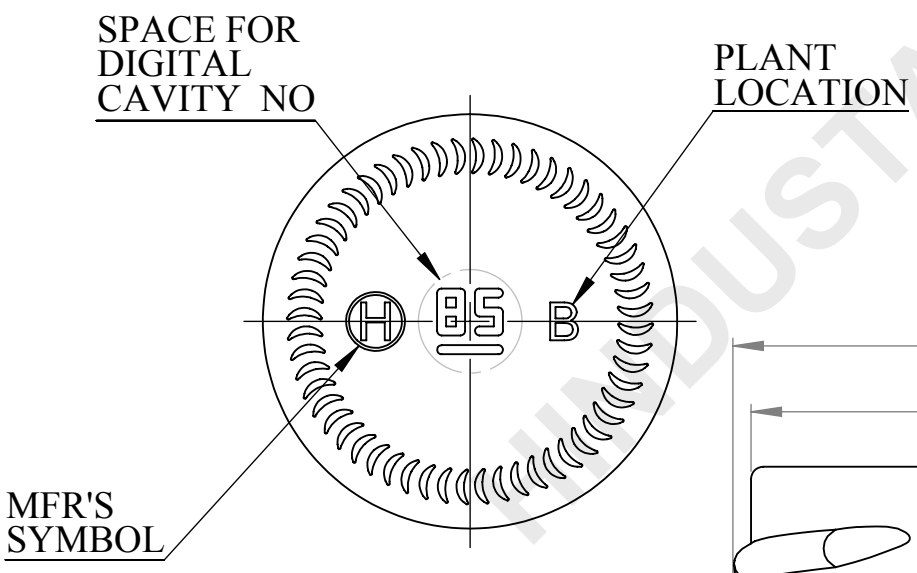

BOTTOM VIEW

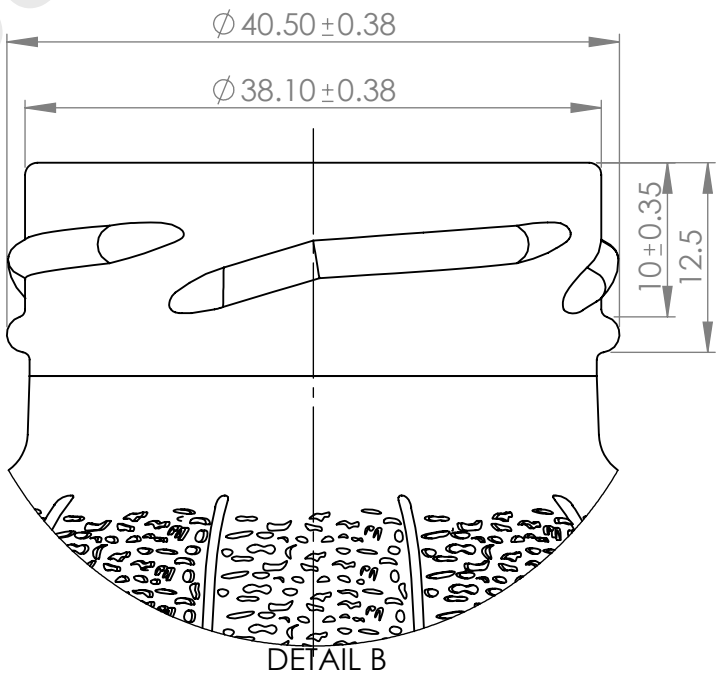

DETAIL B
SCALE 2 : 1
43MM LUG SPECIAL

ALL DIMENSIONS ARE IN MILLIMETERS

HINDUSTAN BOTTLES

PROCESS	**P&B**								SPECIFICATION AGREEMENT ARE BASED ON TOLERANCED DIMENSIONS ONLY DO NOT SCALE DRAWING
MINIMUM THROUGH BORE	--								COPYRIGHT RESERVED. NOT TO BE COPIED IN WHOLE OR PART WITHOUT WRITTEN PERMISSION FROM H.N.G.& I. LTD.
FILL POINT VERIFIED	--								HINDUSTHAN NATIONAL GLASS & IND. LTD.
TILT ANGLE	–	REV.	No.	REV.BY.	**REVISION**	**DATE**	**CHK**	**DRC**	
MAXIMUM DEPTH OF STANDARD ENGRAVING	–	**FILL-POINT**			**250±4.5ML**				TITLE 250ML FLINT FANCY (PG) 43MM LUG BOTTLE
MAX. GAS VOLUMES	–	**BRIMFUL CAP.**			**267± 4.5 ML.**				**CUST** **GENERAL MARKET**
REF DRG No :-	**W1-02207**	**WEIGHT**			**140± 8GMS**				**DRN** RAHUL **DR. DT.** 23.10.15
MOULD EQUIPMENT ORDERED BY		**FINISH**			**43 MM LUG SPECIAL**	**COLOUR**	**FLINT**		**CHK.** **CHK. DT.**
PLANT	B	**SURFACE TREATMENT**			**NO**	**C.C. NO.**	**01029**		**APPD.** **APPD. DT.**
									DRAWING No. **HNG-01029** A4 REV. --